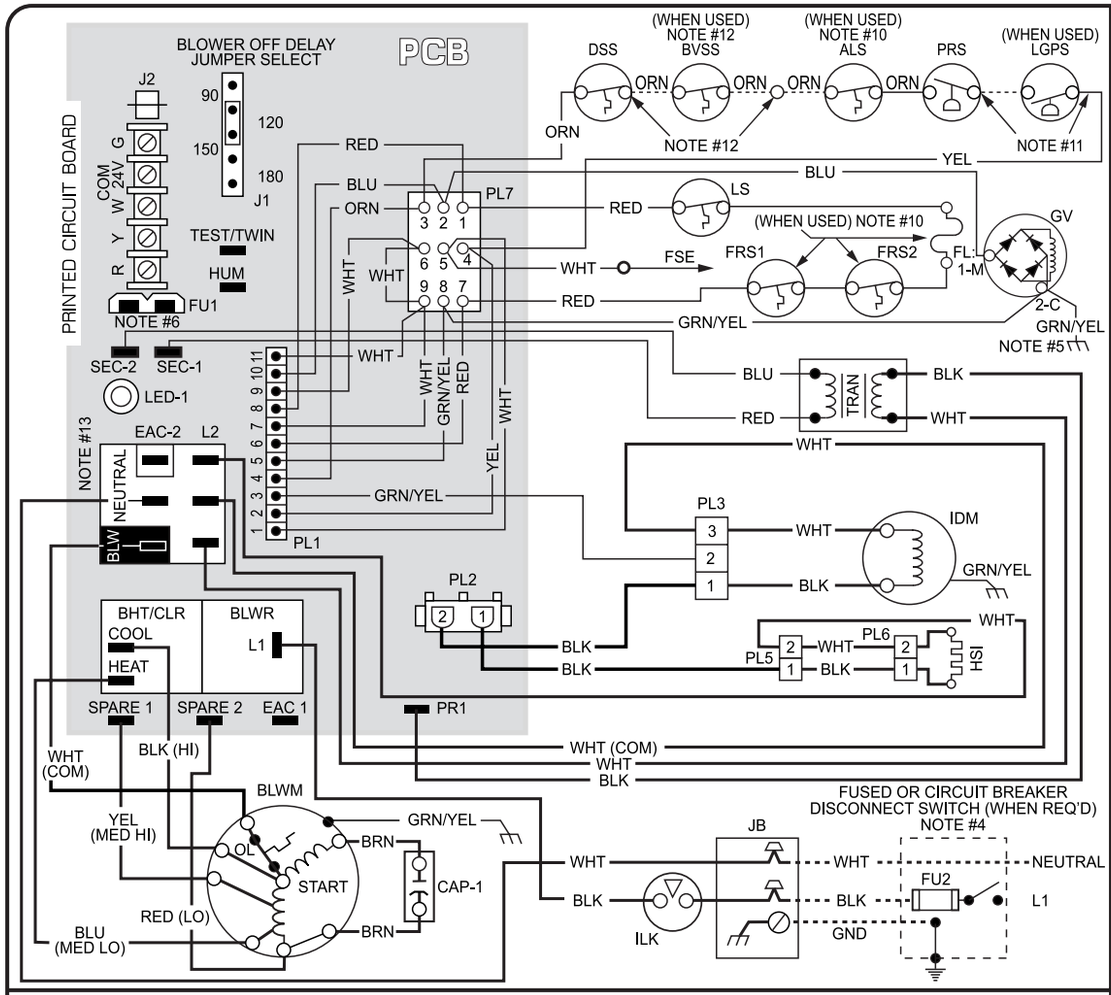


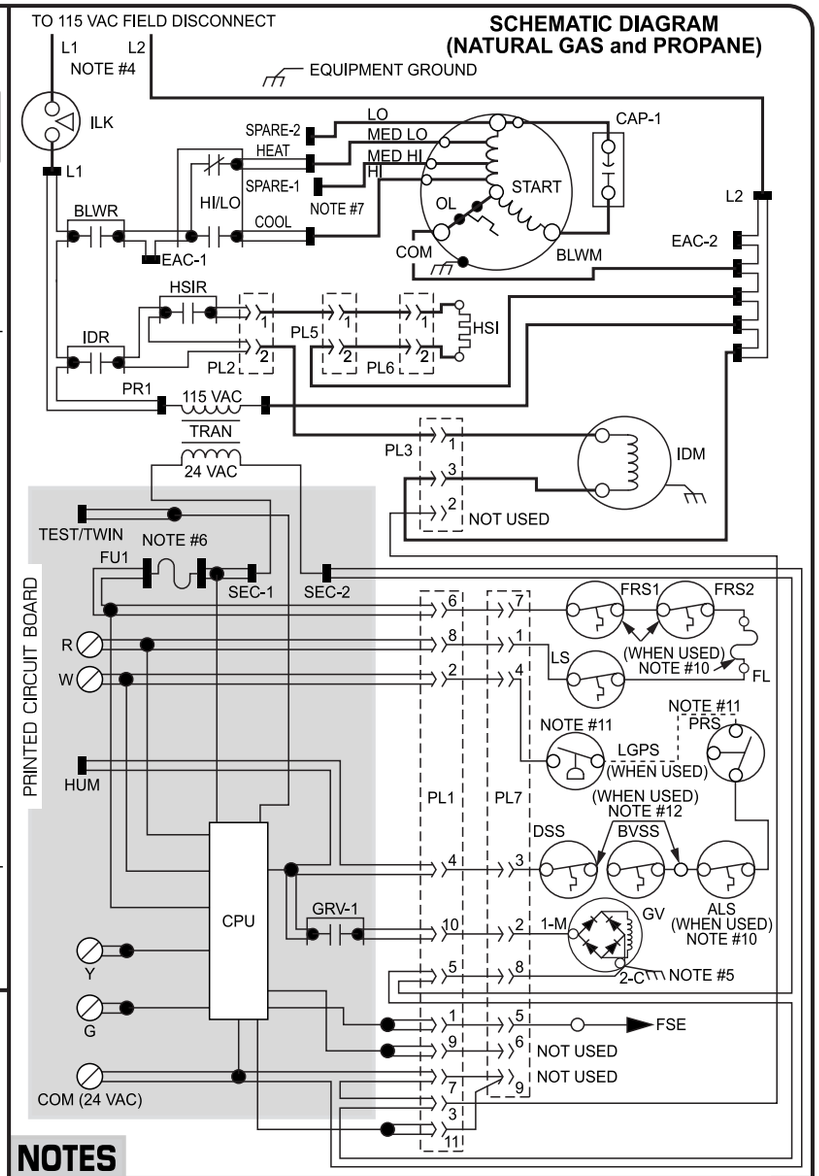


## LEGEND

| | |
|---|---|
| **BHT/CLR** | Blower Motor Speed Change Relay, SPDT |
| **BLWR** | Blower Motor Relay, SPST-(N.O.) |
| **BLWM** | Blower Motor |
| **CAP** | Capacitor |
| **CPU** | Microprocessor and Circuitry |
| **EAC-1** | Electronic Air Cleaner Connection (115 VAC 1.5 Amp Max.) |
| **EAC-2** | Electronic Air Cleaner Connection (Common) |
| **FL** | Fuse Link |
| **FRS** | Flame Rollout S/W – Manual Reset, SPST-(N.C.) |
| **FSE** | Flame-Proving Electrode |
| **FU1** | Fuse, 3 Amp, Automotive Blade Type, Factory Installed |
| **FU2** | Fuse of Circuit Breaker Current Interrupt Device (Field Installed and Supplied) |
| **GND** | Equipment Ground |
| **GV** | Gas Valve – Redundant Operators |
| **GVR** | Gas Valve Relay, DPST-(N.O.) |
| **HI/LO** | Blower Motor Speed Change Relay, SPDT |
| **HSI** | Hot Surface Ignitor (115 VAC) |
| **HSIR** | Hot Surface Ignitor Relay, SPST-(N.O.) |
| **HUM** | 24 VAC Humidifier Connection (.5 Amp Max.) |
| **IDM** | Induced Draft Motor |
| **IDR** | Induced Draft Relay, SPST-(N.O.) |
| **ILK** | Blower Access Panel Interlock Switch, SPST-(N.O.) |
| **JB** | Junction Box |
| **LED** | Light-Emitting Diode for Status Codes |
| **LGPS** | Low Gas Pressure Switch, SPST (N.O.) |
| **LS** | Limit Switch, Auto Reset, SPST (N.C.) |
| **OL** | Auto-Reset Internal Motor Overload Temperature Switch (N.C.) |
| **PCB** | Printed Circuit Board |
| **PL1** | 11-Circuit PCB Connector |
| **PL2** | 2-Circuit PCB Connector |
| **PL3** | 3-Circuit Adapter Connector |
| **PL5** | 2-Circuit Adapter Connector |
| **PL6** | 2-Circuit HSI Connector |
| **PL7** | 9-Circuit Adapter Connector |
| **PRS** | Pressure Switch, SPST-(N.O.) |
| **TEST/TWIN** | Component Test and TWIN Terminal |
| **TRAN** | Transformer - 115 VAC/24 VAC |
| | Junction |
| | Unmarked Terminal |
| | PCB Terminal |
| | Factory Wiring (115 VAC) |
| | Factory Wiring (24 VAC) |
| | Field Wiring (115 VAC) |
| | Field Wiring (24 VAC) |
| | Conductor on PCB |
| | Field Wiring Terminal |
| | Field Earth Ground |
| | Equipment Ground |
| | Field Splice |
| | Plug Receptacle |

LAPP25

## NOTES

1. If any of the original equipment wire is replaced, use wire rated for 105°C.
2. Inducer (**IDM**) and blower (**BLWM**) motors contain internal auto-reset thermal overload switches (**OL**).
3. Blower motor speed selections are for average conditions. See installation instructions for details on optimum speed selection.
4. Use only copper wire between the disconnect switch and the furnace junction box (**JB**).
5. The wire must be connected to furnace sheet metal for control to detect flame.
6. Replace only with 3 amp fuse.
7. Blower-**ON** delay, gas heating 60 seconds, cooling or heat pump 2 seconds.
8. Blower-**OFF** delay, gas heating 90, 120, 150 or 180 seconds, cooling or heat pump 90 seconds or 5 seconds when **J2** is cut.
9. Ignition-lockout will occur after four consecutive unsuccessful trials-for-ignition. Control will auto reset after three hours.
10. When used, auxiliary limit switch (**ALS**) is on some downflow models only. When used, **FL** is on upflow models only. **FRS1** and **FRS2** only used on downflow and horizontal models.
11. Factory connected when **LGPS** is not used
12. Factory connected when **BVSS** is not used. **BVSS** used when Chimney Adapter Accessory Kit is installed.
13. Neutral connections are interchangeable within the **NEUTRAL** connector block.